Production Size Specification **TRICORP**

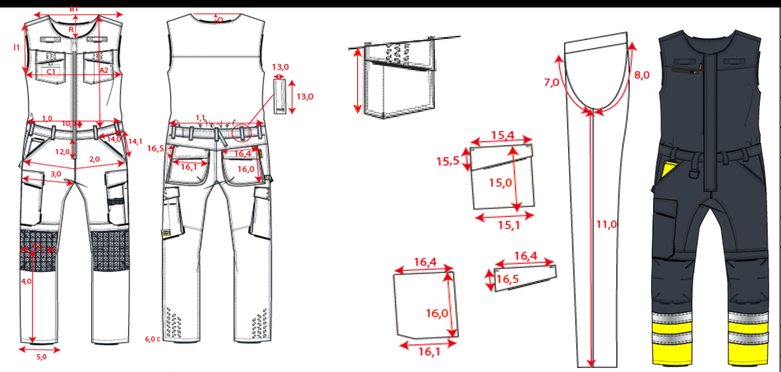

Sketch is for how to measure NOT for style

Stylenumber:	753008
Styledescription:	Bodybroek High Vis
Productgroup:	Overall
Label:	Safety
Sexe:	Unisex
Fabric Description:	Plain weave
Compositon:	65% Polyester, 35% Cotton
Weight:	280 gm2
Color:	ink-Fluoryellow/ ink-Fluororange/ ink-Fluorred
Spec from batch nr:	
Date:	31-10-2019

		421/**42**/422/**44**/423/**46**/424/**48**/425/**50**/426/**52**/427/**54**/428/**56**/429/**58**/430/**60**/431/**62**/432/**64**/433/**66**/67													**Tol**				AQM
A1	Total backl meas from hsp till wb	52	53	54	55	56	57	58	59	60	61	62	63	63	1,0				X
B1	Shoulder to shoulder	39	40,25	41,5	42,75	44	45,3	46,5	47,75	49	50,25	50,25	51,5	52,75	1,0				X
C	1/2 chest (at armhole)	45	47,5	50	52,5	55	57,5	60	62,5	65	67,5	70,5	73,5	76,5	1,0				X
1,0	1/2 Waist relaxed	36	38,5	41	43,5	46	48,5	51	53,5	56	58,5	62,5	66,5	70,5	1,0				X
2,0	1/2 Hip (under zip)	45	47,5	50	52,5	55	57,5	60	62,5	65	67,5	71,5	75,5	79,5	1,0				X
11,0	Inseam, Short 21-22-23-24-25-26-27-28-29-30-31-32-33	78	78	78	78	78	78	78	78	78	78	78	78	78	0,5				X
11,0	Inseam, Regular 42-44-46-48-50-52-54-56-58-60-62-64-66	83	83	83	83	83	83	83	83	83	83	83	83	83	0,5				X
11,0	Inseam, Long 43-45-47-49-51-53-55-57-59-61-63-65-67	88	88	88	88	88	88	88	88	88	88	88	88	88	0,5				X