Production Size Specification **TRICORP**

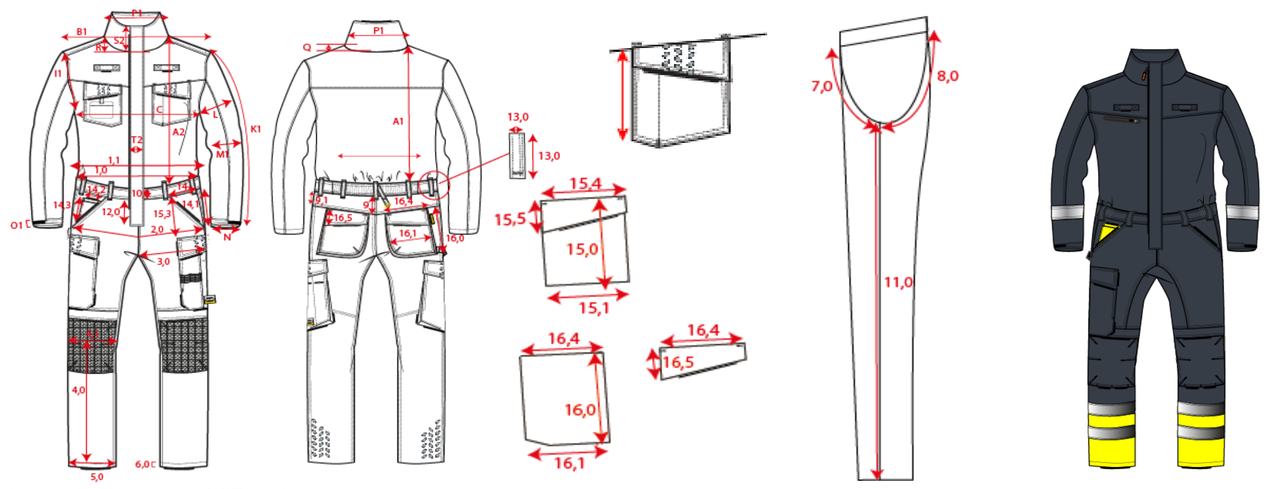

Sketch is for how to measure NOT for style

Stylenumber:	753010
Styledescription:	Overall High Vis
Productgroup:	Overall
Label:	Safety
Sexe:	Unisex
Fabric Description:	Twill
Compositon:	65%Polyester,35% Cotton
Weight:	280 gm2
Color:	ink-Fluoryellow/ Ink-Fluororange/ Ink-Fluorred
Spec from batch nr:	
Date:	31-10-2019

		21/**42**/43	22/**44**/45	23/**46**/47	24/**48**/49	25/**50**/51	26/**52**/53	27/**54**/55	28/**56**/57	29/**58**/59	30/**60**/61	31/**62**/63	32/**64**/65	33/**66**/67	**Tol**				AQM
A1	NEW Total backl meas from hsp till wb	52	53	54	55	56	57	58	59	60	61	62	63	64	1,0				X
B1	Shoulder to shoulder	47	48,25	49,5	50,75	52	53,25	54,5	55,75	57	58,25	60	61,75	63,5	1,0				X
C	1/2 chest (at armhole)	49	51,5	54	56,5	59	61,5	64	66,5	69	71,5	75,5	79,5	83,5	1,0				X
K1	Upper arm length long sleeve	65	65,5	66	66,5	67	67,5	68	68,5	69	69,5	70	70,5	71	0,5				X
1,0	1/2 Waist relaxed	36	38,5	41	43,5	46	48,5	51	53,5	56	58,5	62,5	66,5	70,5	1,0				X
2,0	1/2 Hip (under zip)	45	47,5	50	52,5	55	57,5	60	62,5	65	67,5	71,5	75,5	79,5	1,0				X
11,0	Inseam, Short 21-22-23-24-25-26-27-28-29-30-31-32-33	78	78	78	78	78	78	78	78	78	78	78	78	78	0,5				X
11,0	Inseam, Regular 42-44-46-48-50-52-54-56-58-60-62-64-66	83	83	83	83	83	83	83	83	83	83	83	83	83	0,5				X
11,0	Inseam, Long 43-45-47-49-51-53-55-57-59-61-63-65-67	88	88	88	88	88	88	88	88	88	88	88	88	88	0,5				X